Size 0223 / single row

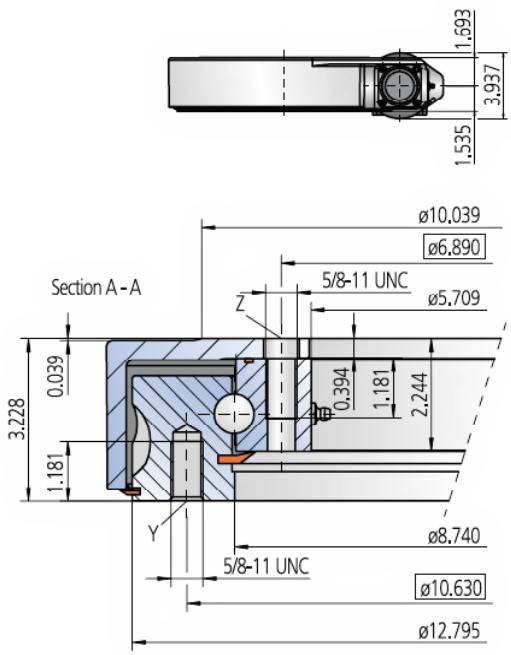

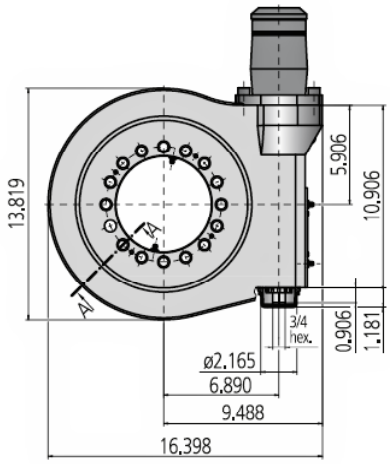

Note, mounting face against upper surface shall be within the limits of ø8.780 and ø12.953

Mounting holes

Y = 16 Holes 5/8-11 UNC - 1.181 deep, equally spaced
Z = 15 Holes ø0.709 - 0.394 deep / 5/8-11 UNC - 1.181 deep, equally spaced over 16 pitch

Lubrication ports

2 Taper type grease nipples on the internal diameter
2 Taper type grease nipples on the outside of the housing

Slew Drive supplied pre-lubricated

Drawing reference number WD-LA 0223/3-06370			
Module	**m**	[mm]	5
Number of starts of the worm		[-]	1
Gear ratio	**i**	[-]	62
Self-locking gears			no**
Maximum torque SFS = 1	$M_{d\,max}$	[ft-lbs]	6,861
Nom. torque SF = 1 at n = 1 rpm	$M_{d\,nom}$	[ft-lbs]	3,536
Maximum holding torque*	M_h	[ft-lbs]	6,861
Static load rating, radial	$C_{o\,rad}$	[lbs x 1,000]	45
Static load rating, axial	$C_{o\,ax}$	[lbs x 1,000]	122
Dynamic load rating, radial	C_{rad}	[lbs x 1,000]	29
Dynamic load rating, axial	C_{ax}	[lbs x 1,000]	34
Weight		[lbs]	105

*Optional with brake
**Self-locking with mounted permanent brake or with mounted hydraulic motor and oil return stop

The selection of the hydraulic / electric motor depends on actual customer requirements and specifications.
Selection example: performance data with hydraulic motor H-160

Pressure differential	Δp	[psi]	2,103
Oil flow	**Q**	[gal(US)/min]	3.70
Output speed	**n**	[rpm]	1
Maximum achievable torque	M_d	[ft-lbs]	6,861

Limiting load diagram for 'compressive' load

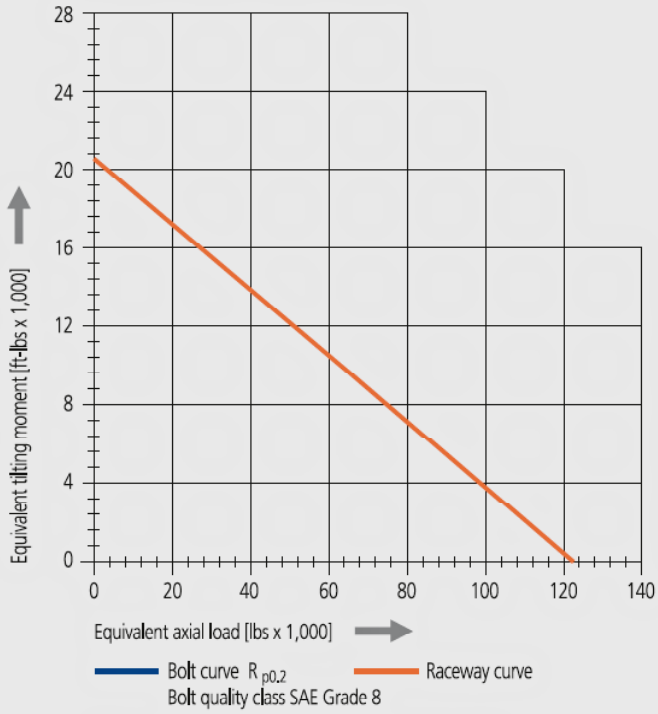

Please adhere strictly to the Technical Information section when using above graph!