Size 0343 / single row

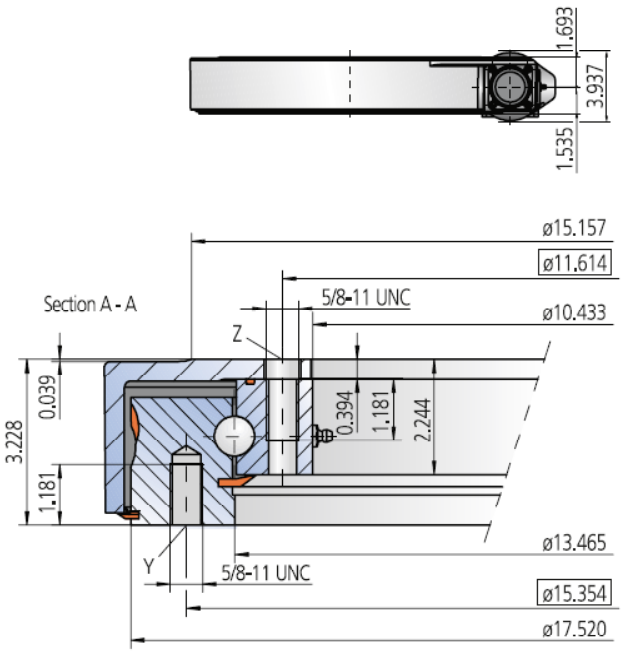

Note, mounting face against upper surface shall be within the limits of ø13.504 and ø17.677

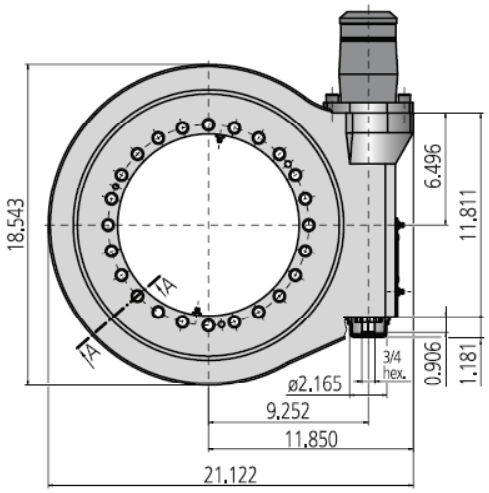

Mounting holes

Y = 18 Holes 5/8-11 UNC - 1.181 deep, equally spaced
Z = 24 Holes ø0.709 - 0.394 deep / 5/8-11 UNC - 1.181 deep, equally spaced

Lubrication ports

2 Taper type grease nipples on the internal diameter
2 Taper type grease nipples on the outside of the housing

Slew Drive supplied pre-lubricated

Drawing reference number WD-LA 0343/3-06371			
Module	m	[mm]	5
Number of starts of the worm		[-]	1
Gear ratio	i	[-]	86
Self-locking gears			no**
Maximum torque SFS = 1	$M_{d\ max}$	[ft-lbs]	9,518
Nom. torque SF = 1 at n = 1 rpm	$M_{d\ nom}$	[ft-lbs]	7,486
Maximum holding torque*	M_h	[ft-lbs]	9,518
Static load rating, radial	$C_{o\ rad}$	[lbs x 1,000]	75
Static load rating, axial	$C_{o\ ax}$	[lbs x 1,000]	203
Dynamic load rating, radial	C_{rad}	[lbs x 1,000]	35
Dynamic load rating, axial	C_{ax}	[lbs x 1,000]	41
Weight		[lbs]	159

*Optional with brake
**Self-locking with mounted permanent brake or with mounted hydraulic motor and oil return stop

The selection of the hydraulic / electric motor depends on actual customer requirements and specifications.
Selection example: performance data with hydraulic motor H-160

Pressure differential	Δp	[psi]	2,103
Oil flow	Q	[gal(US)/min]	4.80
Output speed	n	[rpm]	1
Maximum achievable torque	M_d	[ft-lbs]	9,518

Limiting load diagram for 'compressive' load

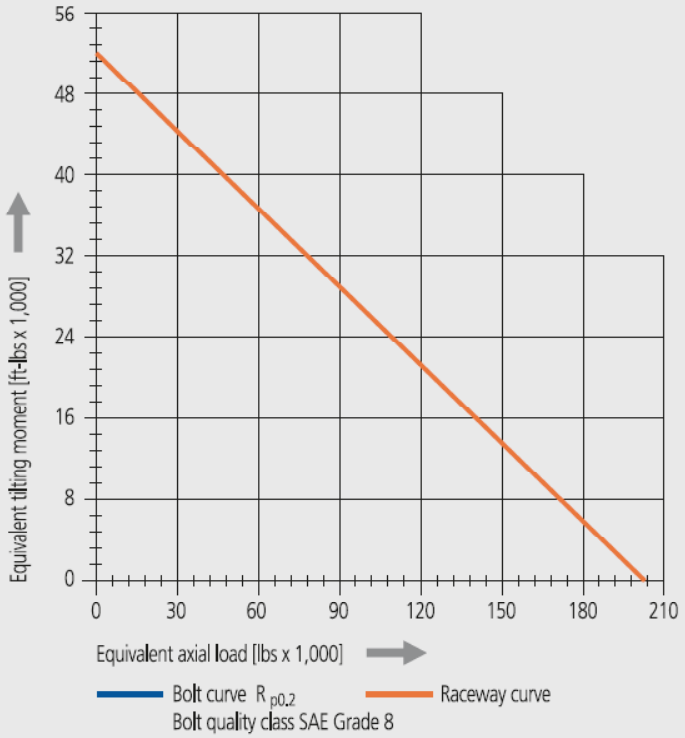

Please adhere strictly to the Technical Information section when using above graph!